Augur - RosAeroSystems (RAS)

Russian leading LTA manufacturer since 1991

RosAeroSystems™
owned by AUGUR Inc.

ATLANT: The Future Technology for Remote Territories Development

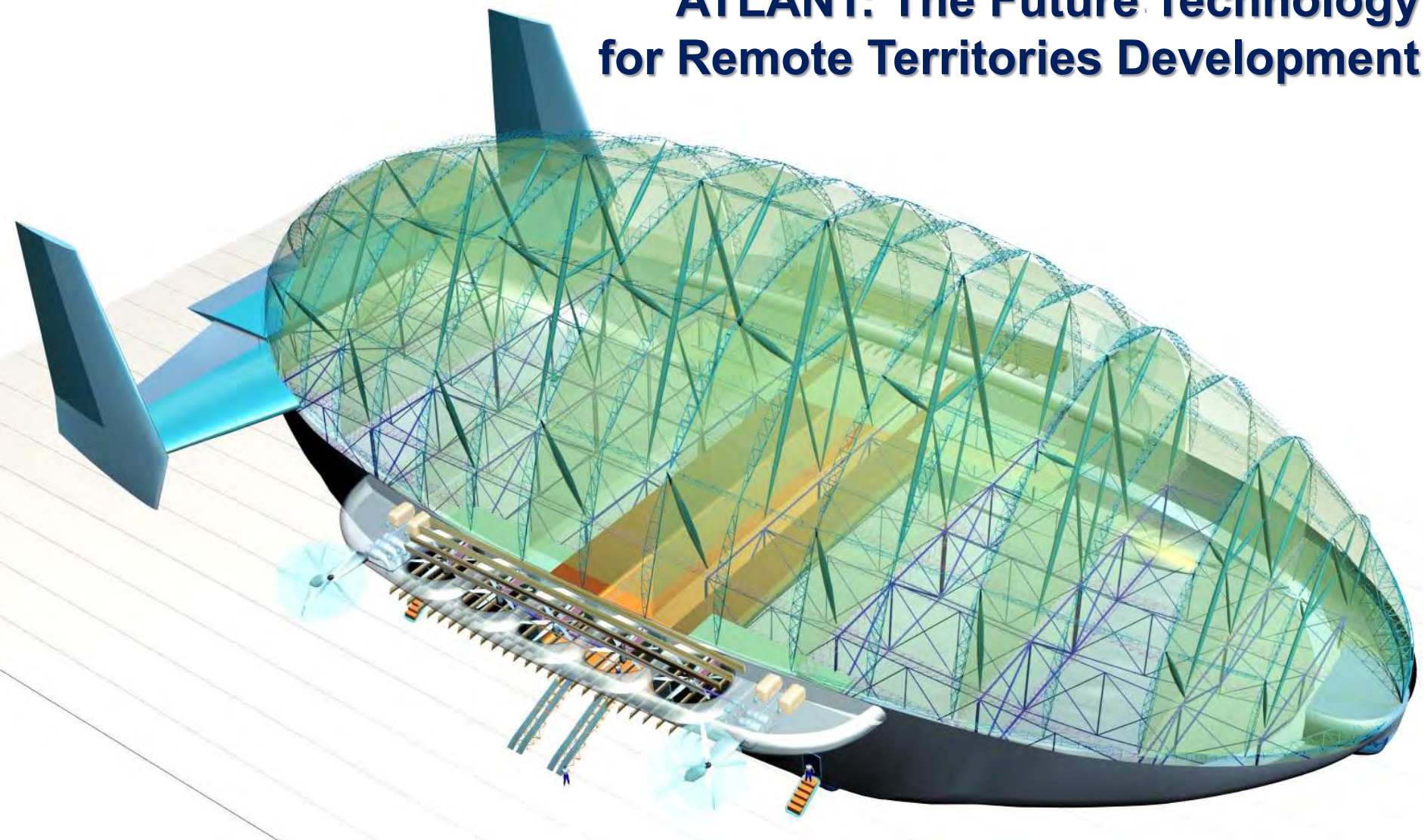

Among Worldwide LTA Leaders

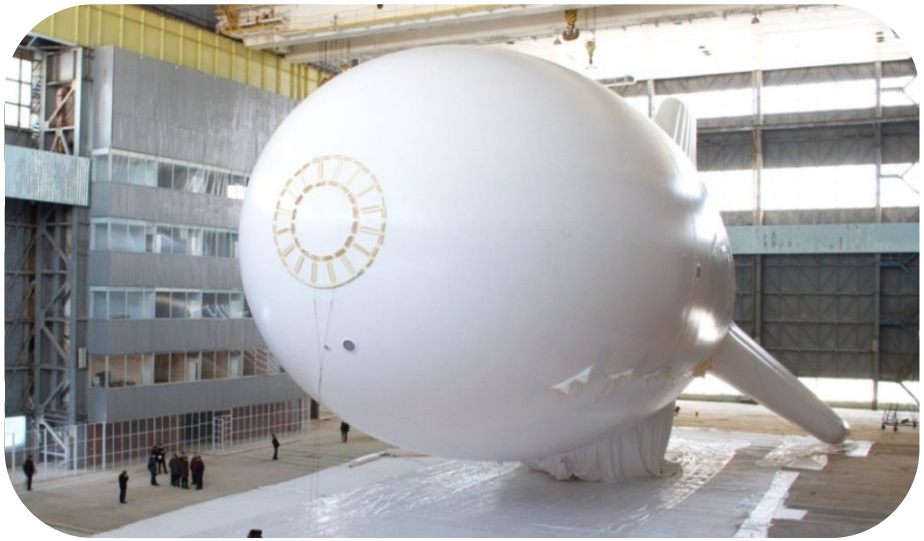

- One of the very few companies in the World that produce both manned airships and tethered aerostats.
- One of three companies worldwide with proven capabilities for medium, large and extra-large aerostats
- One of the few companies in the World with completed envelope production based on computerized cutting and welding HF technology
- The Company combines professionals from Russian aerospace and defense industries.

Recent Achievements

2012

- Resident of the Skolkovo Innovation Centre. The project of Hybrid Airship “ATLANT” got a high experts total grade.

2013

- Manufacturing and Test Facility designated to manufacture envelopes for advanced LTA vehicles has been created.

Recent Achievements

2013

- The first Russian airship base equipped all necessary infrastructure has been revived.

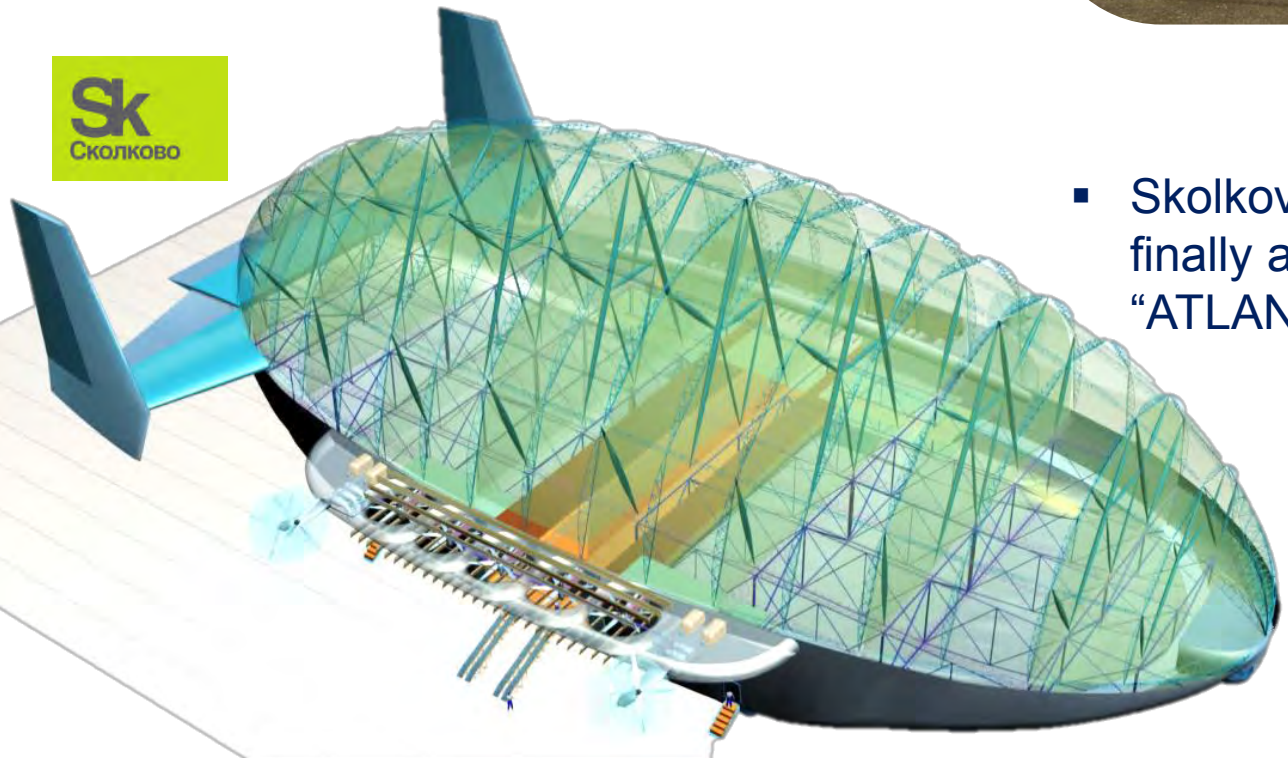

2014

- Skolkovo Grant Committee has finally approved the funding of the “ATLANT” project

ATLANT – Glance to the Future

- Non-ballast loading and discharge
- Hangarless long time operation
- Buoyancy control
- Large - dimensioned freight capabilities
- VTOL
- Low dimensions
- No feathering at mooring
- Door-to-door cargo delivery
- Up to 160 km/h speed

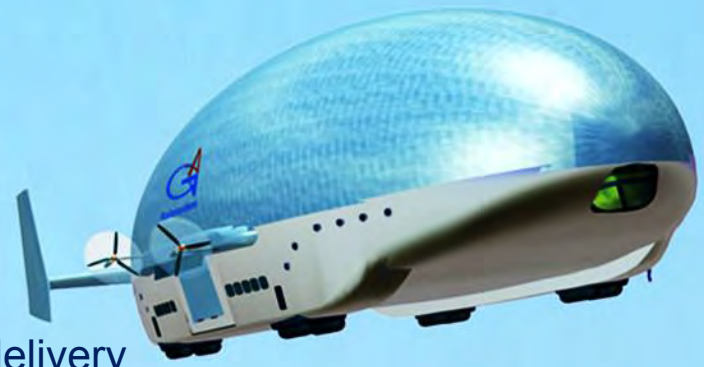

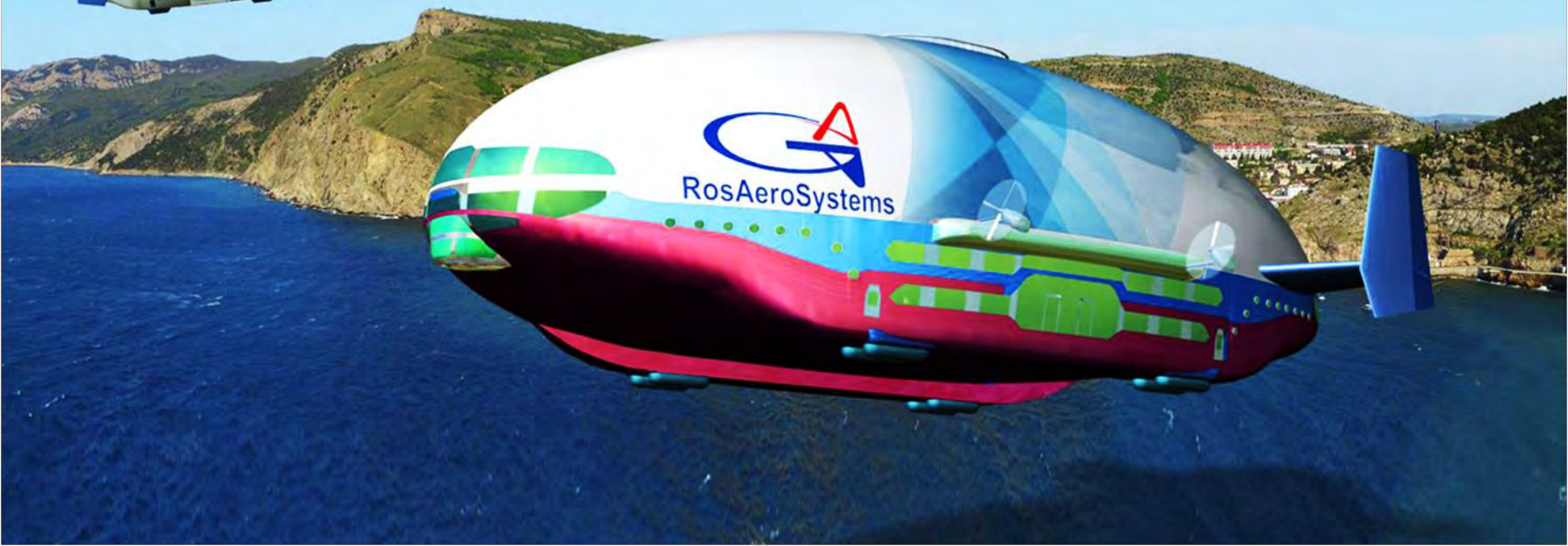

ATLANT vs. Other Aircrafts

Parameters	Helicopter		Airplane		ATLANT	
	Mi-8T	*Mi-26*	*Il-76TD*	*An-124-100*	*ATLANT-30*	*ATLANT-100*
Maximum flight range, km	500		4,900	**7,500**	5,000	
Maximum carrying capacity, kg	4	20	50	**120**	16	60
Maximum flight speed, km/h	250	295	**800**	**865**	160	
Runway need	**No**		Yes		**No**	
Water landing	No				**Yes**	
Door-to-door delivery	**Yes**		No		**Yes**	
Comparative fuel consumption (airship considered as 1)	*5 – 15*		*2 – 3*		***1***	
Flight hour cost, €	2,935	18,065	4,539	18,855	**1,027**	**2,326**

Cargo bay dimensions (meters)

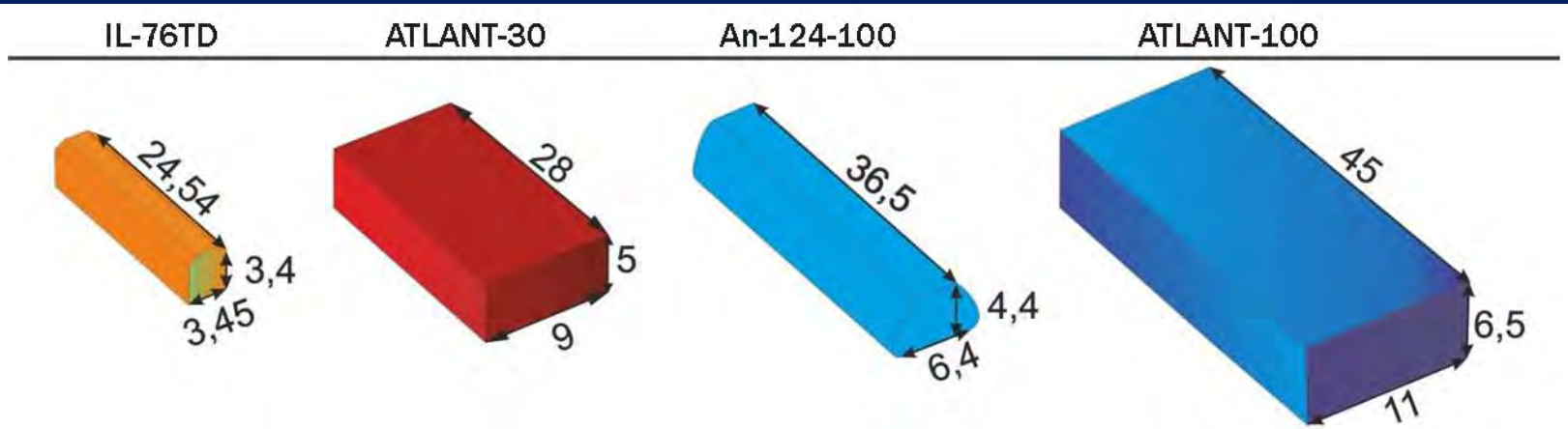

Coverage Area

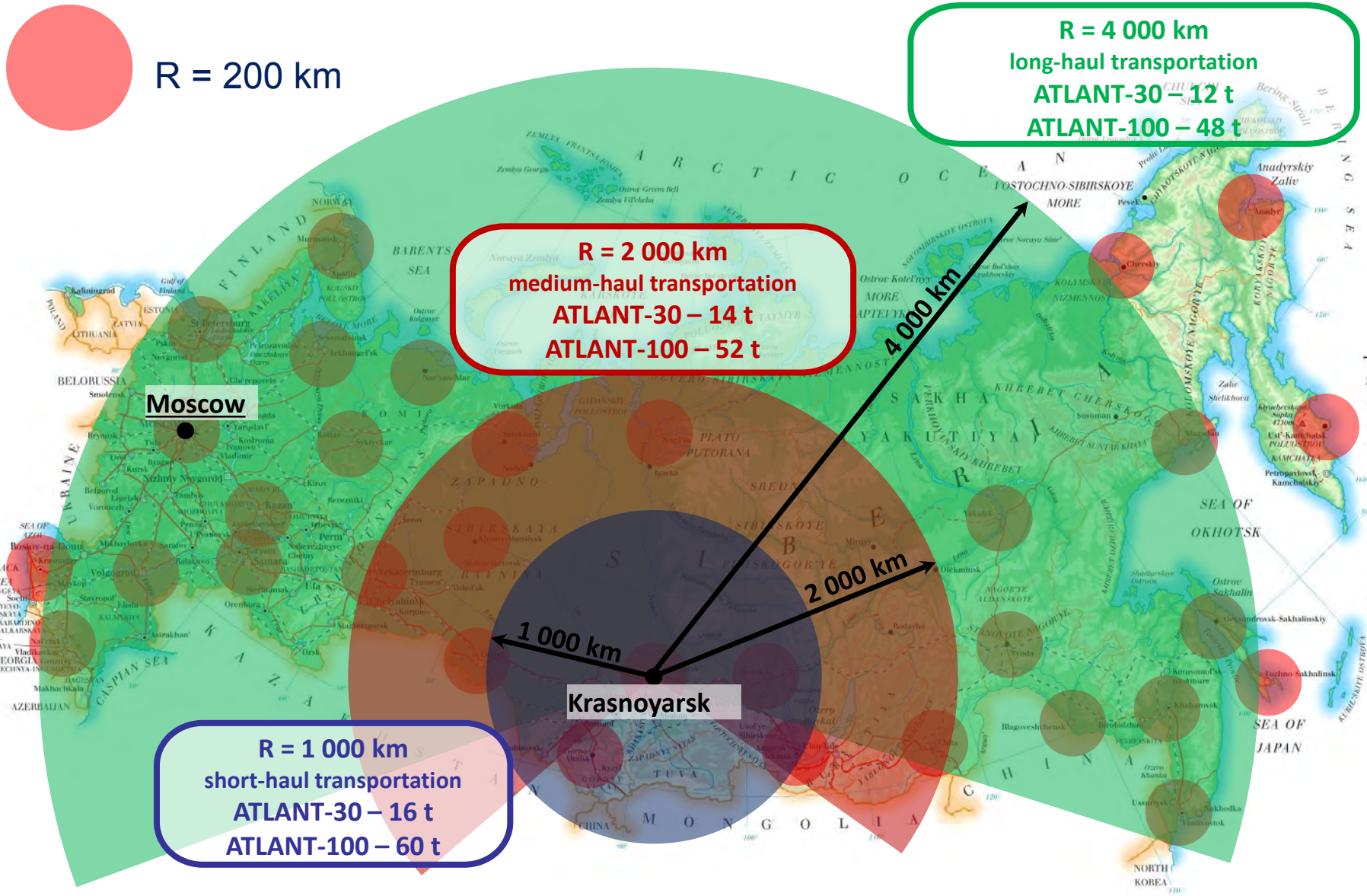

Technology Design Concept

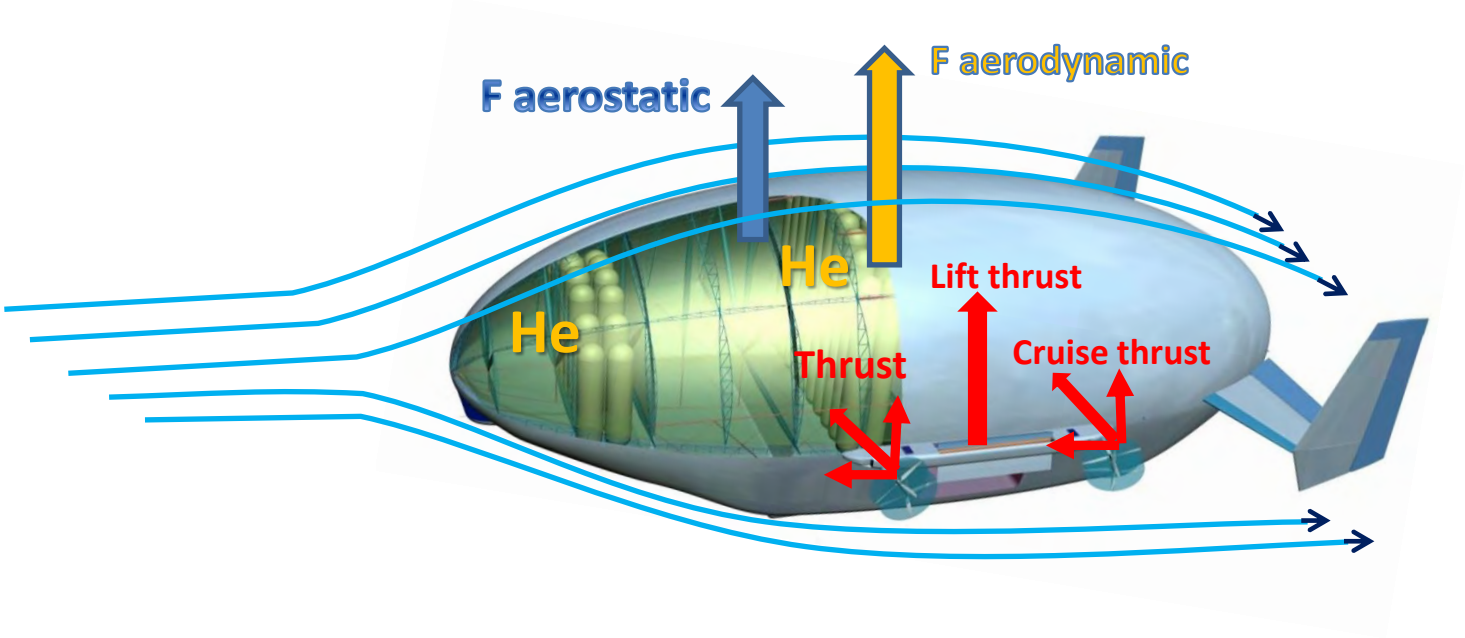

In Flight

↓	Constant weight 55%	Payload 45% / Commercial payload 40%	5%		Maximum take-off weight
↑	Aerostatic force 70%		Aerodynamic force 30%		Forward flight
↑	Aerostatic force 70%		Cruise thrust 20%	Lift thrust 20%	+10% ↑ Vertical takeoff
	Aerostatic force 70%		Cruise thrust 20%	Aerodynamic force 15%	+5% ↑ Short takeoff

On Ground

↓	Constant weight 55%	ABS 20%	Mooring 20%		-25% ↓ Autonomous mooring

Technology Design Concept

- ✓ Overview structure and mathematic model of the rigid hull’s surface are designed.
- ✓ Wind-tunnel tests of small-scale model are performed at Moscow Aviation Institute.
- ✓ Aircraft configuration and power plant composition are designed.
- ✓ Innovative design concepts and manufacturing from composite materials technique are practiced.

Any surface landing, no need for feathering are enabled by ***the structure of ATLANT.***

Year-round operation with no hangars is enabled by ***rigid hull.***

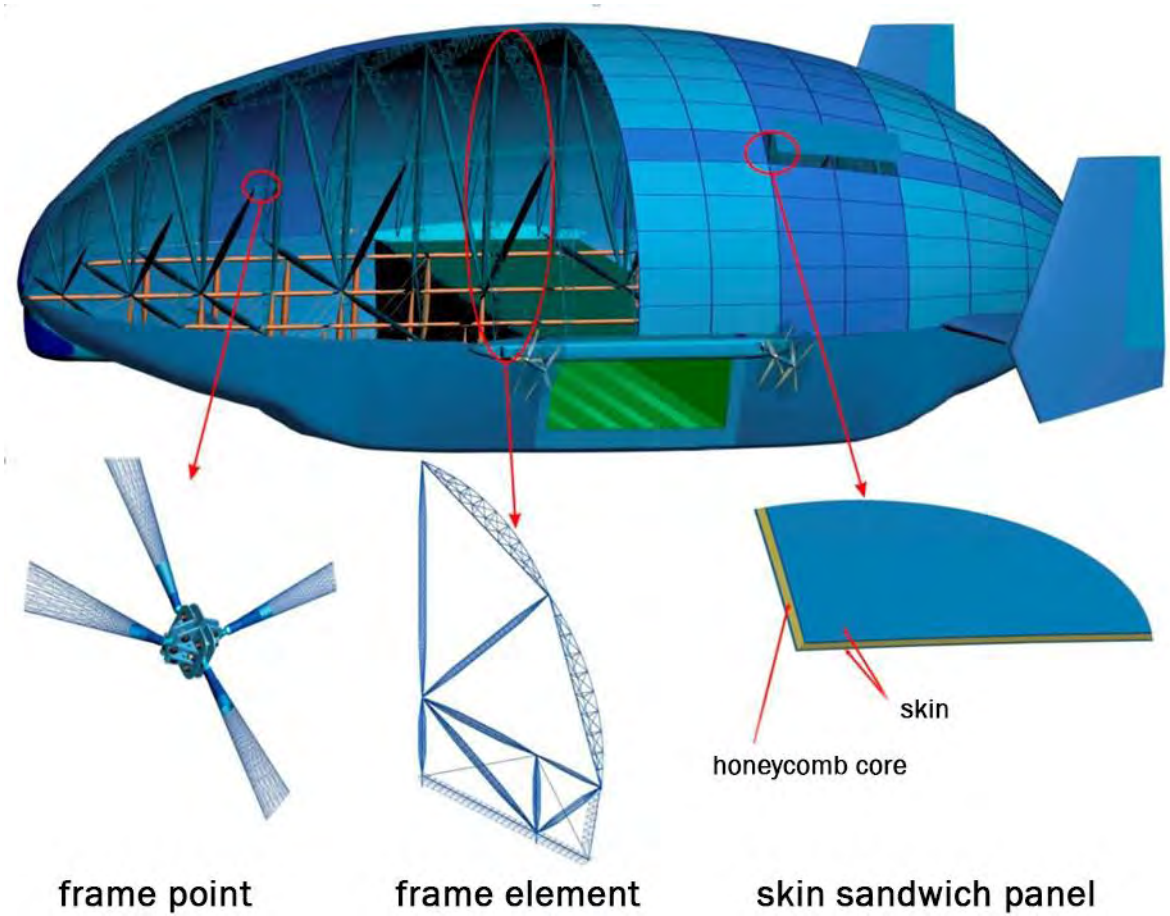

Technology Design Concept

VTOL-ensured ***ejector-lift and vectored-thrust*** configuration is designed.

ATLANT-30’s lift propulsion system

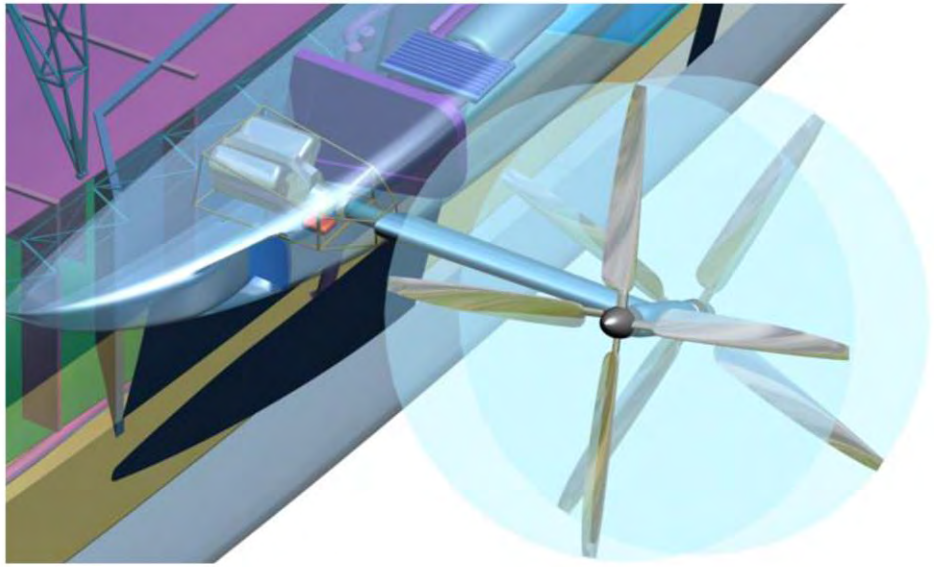

Total takeoff power	*6,000 kgf*
Number of engines	*4*
Fuel type	*jet fuel, diesel oil*
Fuel load	*3,800 kg*
Specific fuel consumption	*0.158 kg/(hp·h)*
Engine	*RED-A03*

ATLANT-30’s ejector lift system

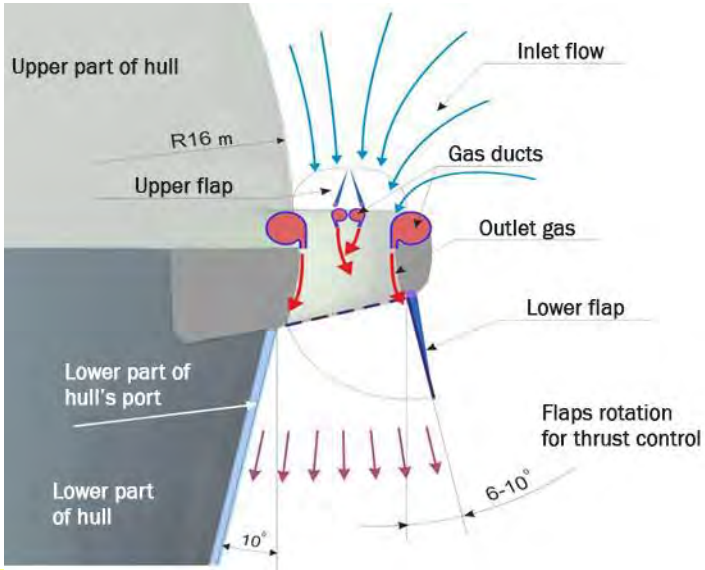

Total takeoff power	*18,000 kgf*
Number of core engines	*4*
Fuel type	*jet fuel*
Fuel load	*1,650 kg*
Specific fuel consumption	*1.1 kg/(kgf·h)*
Endurance per flight	*6 minutes*
Engine	*RD-38*

Technology Design Concept

In-house developed ***Active Ballasting System (ABS)*** is the core ingredient of ATLANT design to control buoyancy at flight and aircraft ballasting on the ground.

ABS allows to unload immediately upon landing.

1. Unloaded ABS ΔG = 0 tonnes

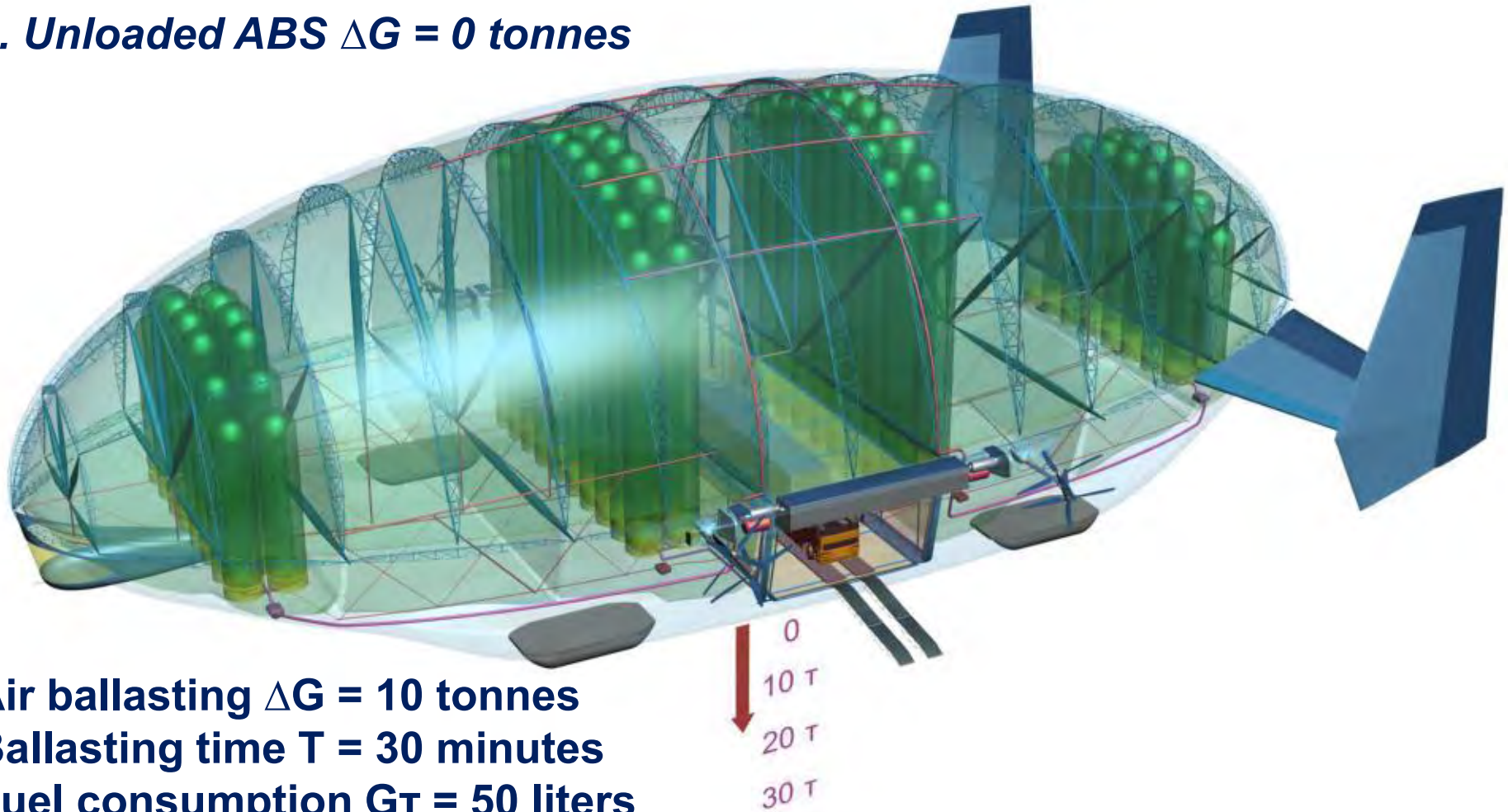

Air ballasting ΔG = 10 tonnes
Ballasting time T = 30 minutes
Fuel consumption Gт = 50 liters

Technology Design Concept

In-house developed ***Active Ballasting System (ABS)*** is the core ingredient of ATLANT design to control buoyancy at flight and aircraft ballasting on the ground.

ABS allows to unload immediately upon landing.

2. Air ballasting ΔG = 10 tonnes

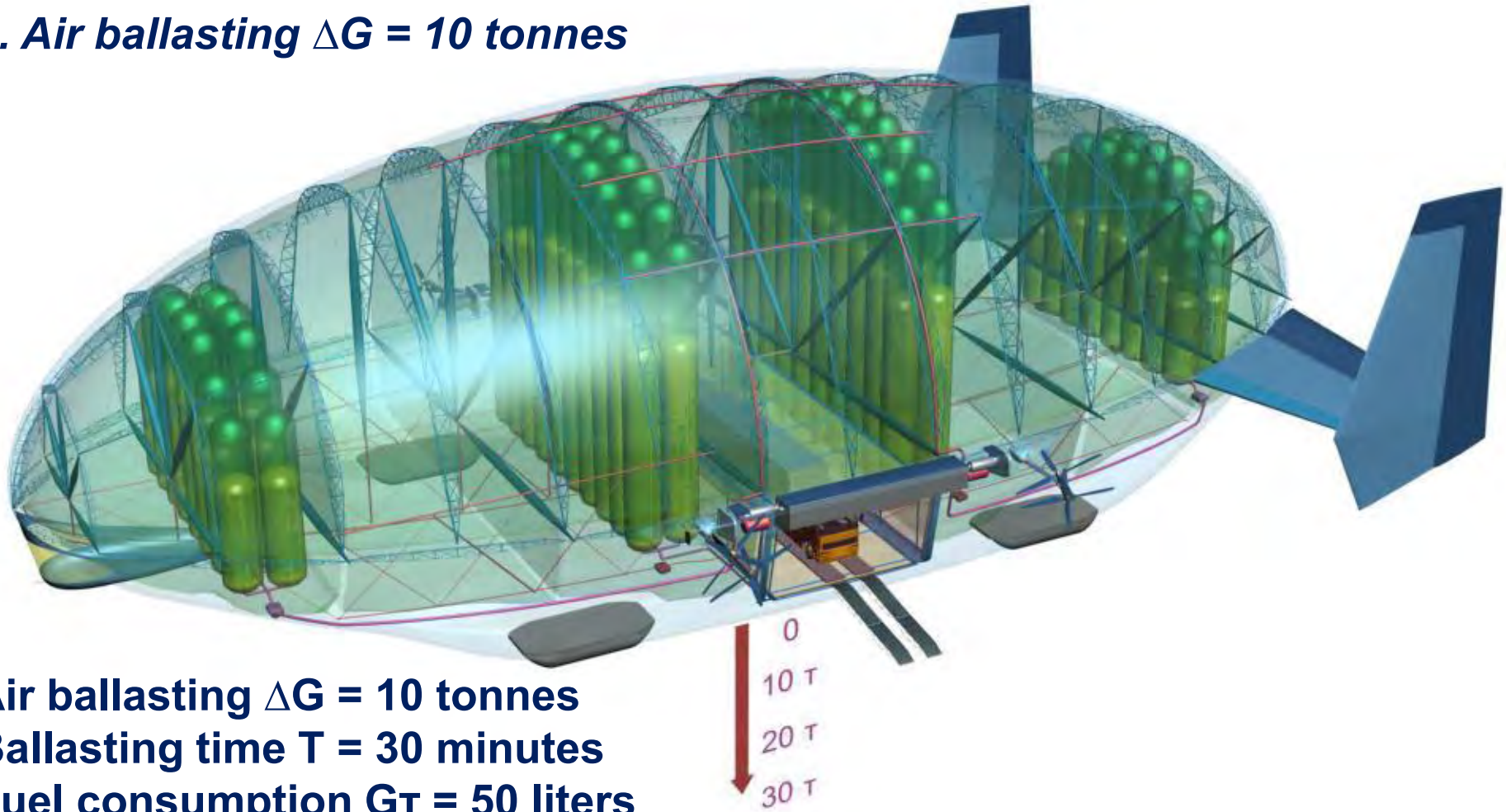

Air ballasting ΔG = 10 tonnes
Ballasting time T = 30 minutes
Fuel consumption Gт = 50 liters

Technology Design Concept

In-house developed ***Active Ballasting System (ABS)*** is the core ingredient of ATLANT design to control buoyancy at flight and aircraft ballasting on the ground.

ABS allows to unload immediately upon landing.

3. Air ballasting ΔG = 10 tonnes. Unloading

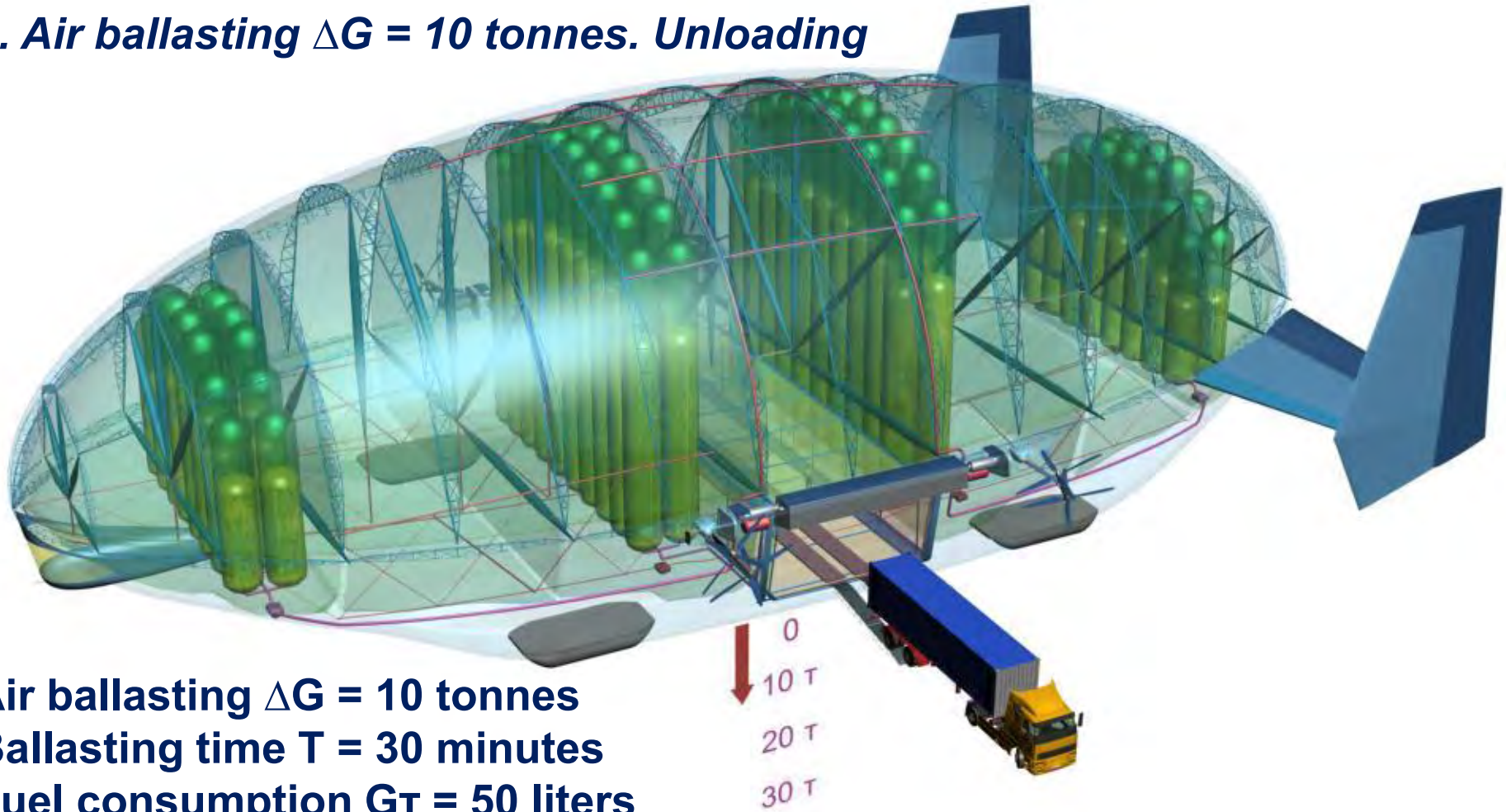

Air ballasting ΔG = 10 tonnes
Ballasting time T = 30 minutes
Fuel consumption Gт = 50 liters

Intellectual Property Under the Project

1. Utility model patent № 129080
   «Rigid airship».

2. Invention patent № 2518381
   «Rigid airship».

3. Utility model patent № 132051
   «Vectored-thrust power plant».

4. Claim for an invention № 2013116717
   «Vectored-thrust power plant».

5. Invention patent № 2434927
   «The prevention method of hydrogen-air mixtures inflammation and detonation».

6. Invention patent № 2441685
   «The gas composition for the prevention of hydrogen-air mixtures inflammation and detonation».

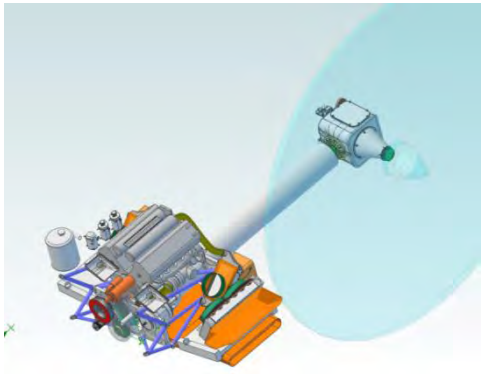

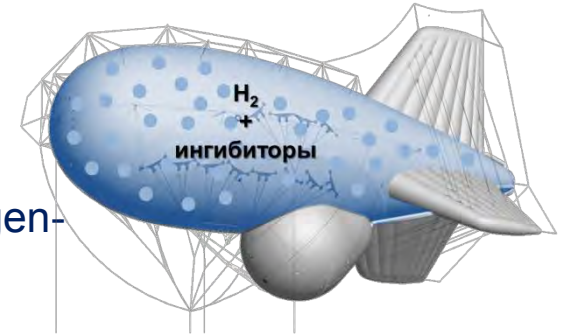

RosAeroSystems™
owned by AUGUR Inc.

THANK YOU FOR THE ATTENTION!

125315, Moscow, Leningradsky avenue, 68, bld.16
Phone/fax: +7 (495) 989-74-25

www.rosaerosystems.com
info@rosaerosystems.com
sales@rosaerosystems.com